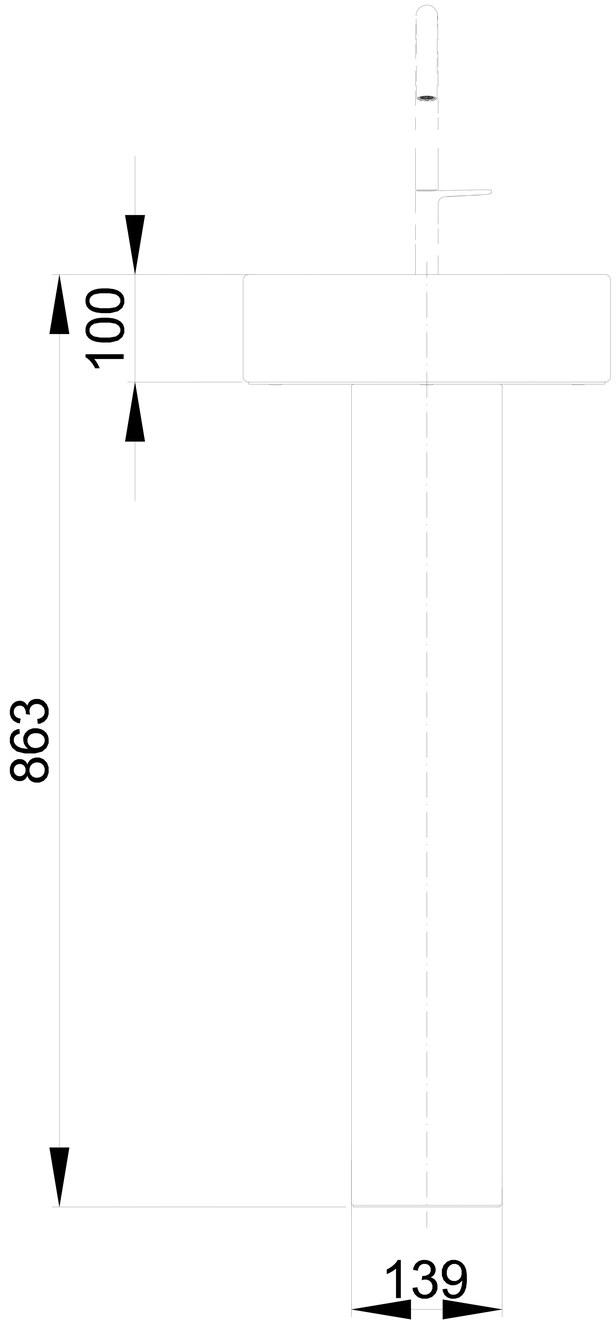
100
863
139

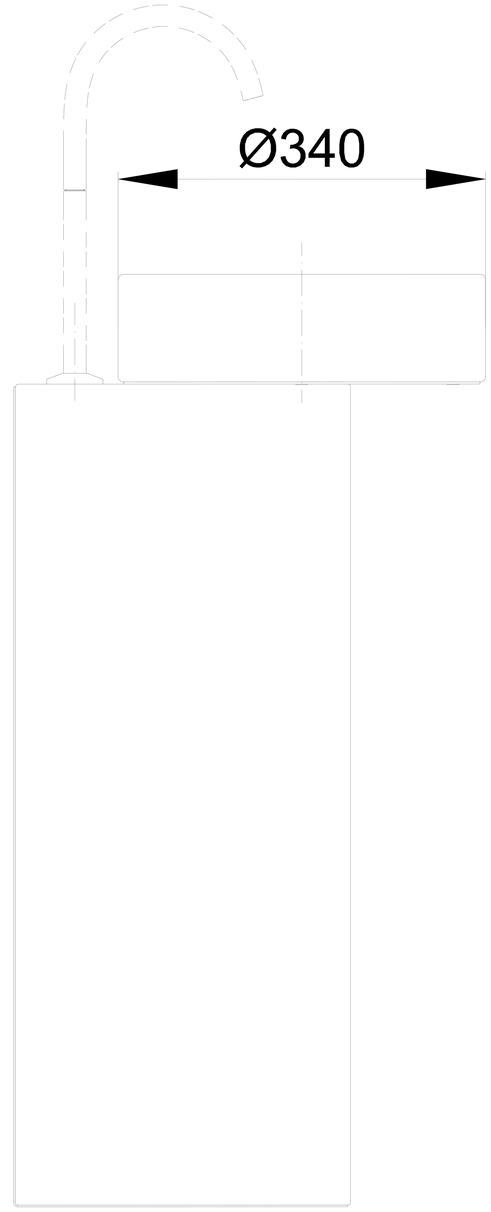
Ø340

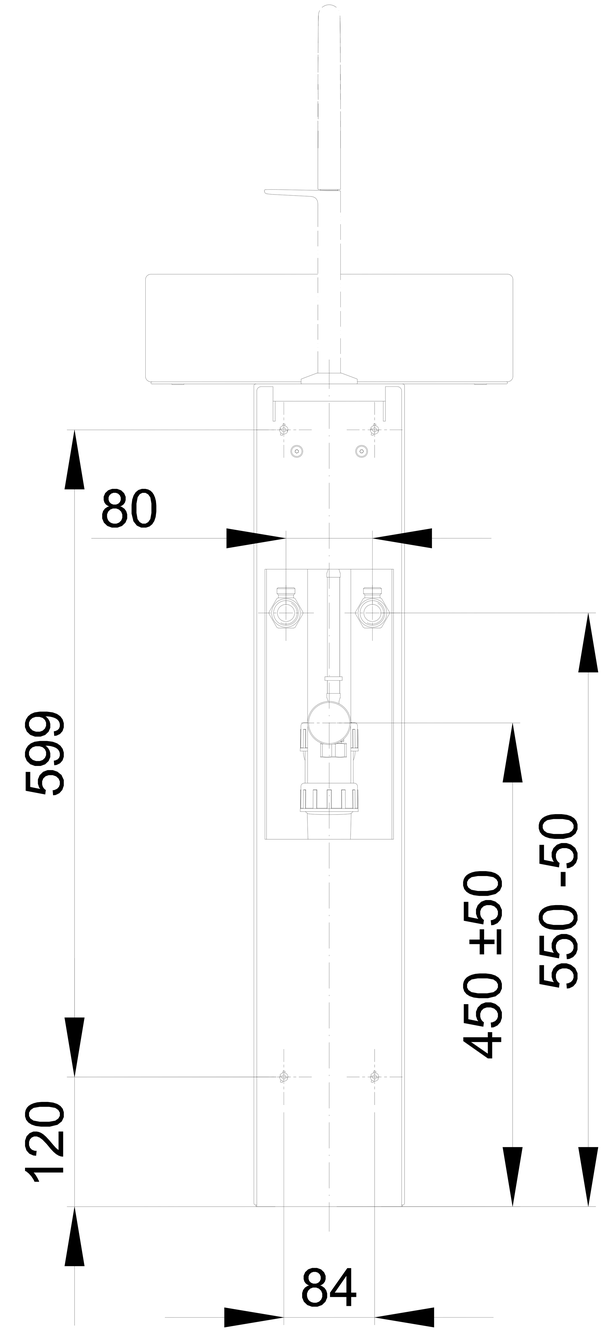
80
599
120
450 ±50
550 -50
84

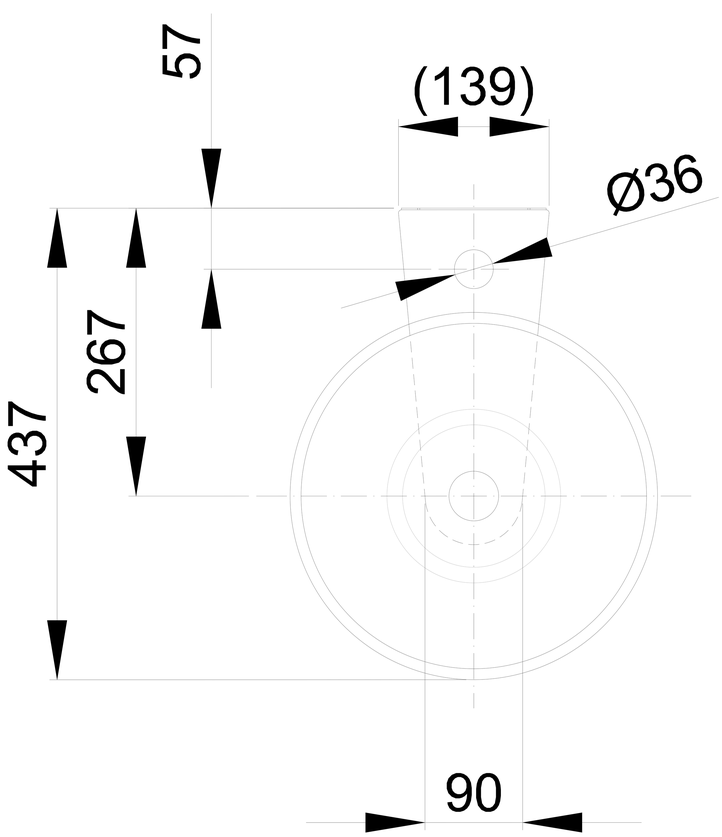
57
(139)
Ø36
267
437
90